# HIGH POWER LED BULB

Data Sheet

**Description**:

These high powed LED Bulbs are specifically designed for flashlight electric equipment, indicator light switch and where a wide view angle. The 5mm round shaped radiation pattern (60°) and high luminous intensity ensure that these devices are excellent for wide field of view outdoor applications where a wide viewing angle and readability in sunlight are essential.

High efficiency LED materials are used in this Bulb.
Every lamp is made with an advanced optical grade epoxy offering superior high shock and high temperature resistance in outdoor applications.

**Feature:**

- Wide view angle
- High luminous output
- Solid-state Vibration resistant
- Saving power
- Long life

**Option:**

- 12V/24V AC/DC
- Other industry standard base

A-BRIGHT

A-BRIGHT INDUSTRIAL CO.,LTD.

# A-BRIGHT INDUSTRIAL CO., LTD.

***Part No.: AB-0151BD-12V-M00-0*** ***High Power LED Bulb***

**PACKAGE DIMENSIONS:**

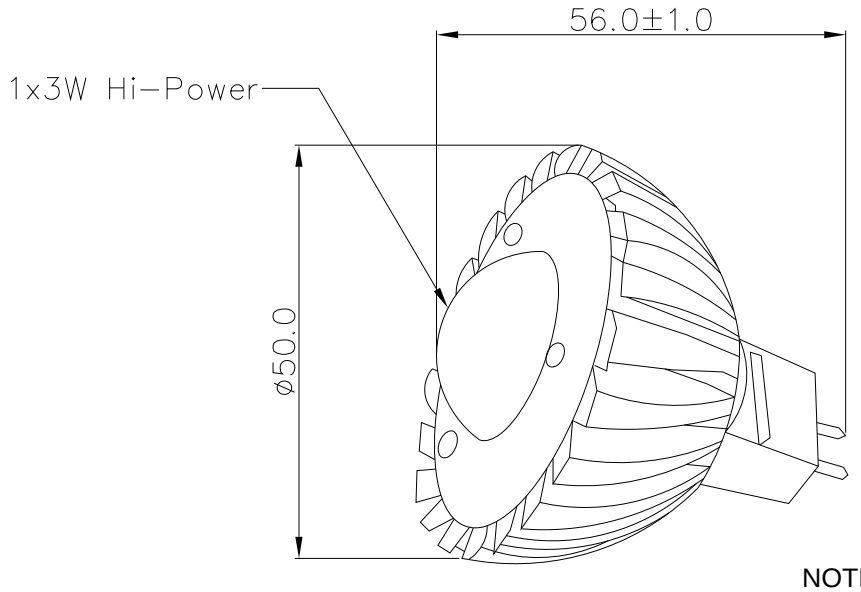


NOTE:

1.All dimensions are in millimeter.

2.Bulb base : MR16.

3.All tolerance are ±0.5mm.

# A-BRIGHT INDUSTRIAL CO., LTD.

***Part No.: AB-0151BD-12V-M00-0*** ***High Power LED Bulb***

**FEATURE:**

- SUPER LUMINOSITY BLUE LED (InGaN).
- WATER CLEAR PACKAGE.
- 5mm ALL RESIN MOLD.
- WIDE VIEWING ANGLE.
- BASE MODEL MR16.
- ELECTRIC AC/DC BI-POLAR.

**ABSOLUTE MAXIMUM RATING:** **Ta = 25 ℃**

- **OPERATING TEMPERATURE..... －20 TO ＋80℃**
- **STORAGE TEMPERATURE..... －40 TO ＋80℃**
- **LED BULB LIFE…….. 20000 HOURS**
  **(LUMINANCE REDUCES to 50%)**

**ABSOLUTE OPTICAL CHARACTERISTIC** **Ta= 25℃**

- Lamp house Material/Parameter

| Spec | LED Diameter | Number | Emitting Color | Dominant Wavelength | | | Luminous Flux | | Forward Voltage | | View Angle |
|---|---|---|---|---|---|---|---|---|---|---|---|
| | | | | Min. | Typ. | Max. | Min. | Typ. | Typ. | Max. | Typ. |
| LED | Ø5 | 01 | Blue | 465 | 470 | — | — | 8 | 3.6 | 4.5 | 60 |

• Finished Product Parameter

| Characteristics | Symbol | MIN. | TYP. | MAX. | Unit |
|---|---|---|---|---|---|
| Power Dissipation | $P_D$ | 1.2 | ／ | 1.6 | W |
| Input Current | (AC/DC) | ／ | 110 | ／ | mA |
| Input Voltage | (AC/DC) | ／ | 12 | 14 | V |
| Luminous Flux | LM | ／ | 8 | ／ | LM |