HIGH POWER LED BULB

Data Sheet

Description:

These high power LED bulbs are specifically designed for flashlight electric equipment, indicator light switch and where a wide view angle. The 5mm round shaped radiation pattern (30°) and high luminous intensity ensure that these devices are excellent for wide field of view outdoor applications where a wide viewing angle and readability in sunlight are essential.

High efficiency LED materials are used in this Bulb.
Every lamp is made with an advanced optical grade epoxy offering superior high shock and high temperature resistance in outdoor applications.

Feature:

- Wide view angle
- High luminous output
- Solid-state Vibration resistant
- Saving power
- Long life

Option:

- 12V/24V AC/DC
- Other industry standard base

A-BRIGHT

A-BRIGHT INDUSTRIAL CO.,LTD.

Part No.: AB-0151WA-24V-M00-0 ***High Power LED Bulb***

PACKAGE DIMENSIONS:

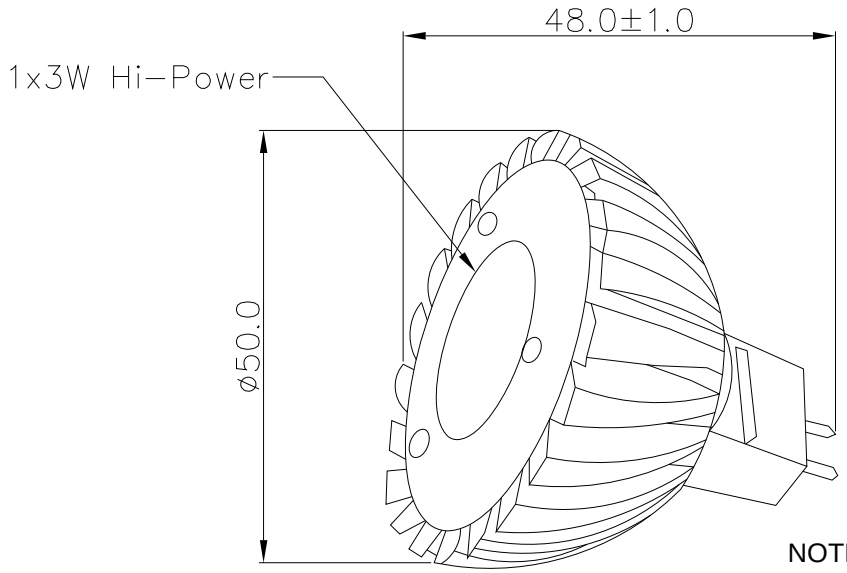

NOTE:

1.All dimensions are in millimeter.

2.Bulb base :MR16.

3.All tolerance are ±0.5mm.

A-BRIGHT INDUSTRIAL CO., LTD.

Part No.: AB-0151WA-24V-M00-0 ***High Power LED Bulb***

FEATURE:

- SUPER LUMINOSITY WHITE LED (InGaN).
- WATER CLEAR PACKAGE.
- 5mm ALL RESIN MOLD.
- WIDE VIEWING ANGLE.
- BASE MODEL MR16.
- ELECTRIC AC/DC BI-POLAR.

ABSOLUTE MAXIMUM RATING: **Ta = 25 ℃**

- **OPERATING TEMPERATURE..... －20 TO ＋80℃**
- **STORAGE TEMPERATURE..... －40 TO ＋80℃**
- **LED BULB LIFE…….. 20000 HOURS**
  (LUMINANCE REDUCES to 50%)

ABSOLUTE OPTICAL CHARACTERISTIC **Ta= 25℃**

- Lamp house Material/Parameter

Spec	LED Diameter	Number	Emitting Color	Chromaticity Coordinates	Luminous Flux		Forward Voltage		View Angle
				Typ.	Min.	Typ.	Typ.	Max.	Typ.
LED	Ø5	01	White	X : 0.31 Y : 0.32	—	18	3.6	4.5	30

• Finished Product Parameter

Characteristics	Symbol	MIN.	TYP.	MAX.	Unit
Power Dissipation	P_D	1.2	／	1.6	W
Input Current	(AC/DC)	／	55	／	mA
Input Voltage	(AC/DC)	／	24	28	V
Luminous Flux	LM	／	18	／	LM